UNIVERSAL CONSTRUCTION PVT. LTD.CO.

ORGANIZATION BREAKDOWN STRUCTURE

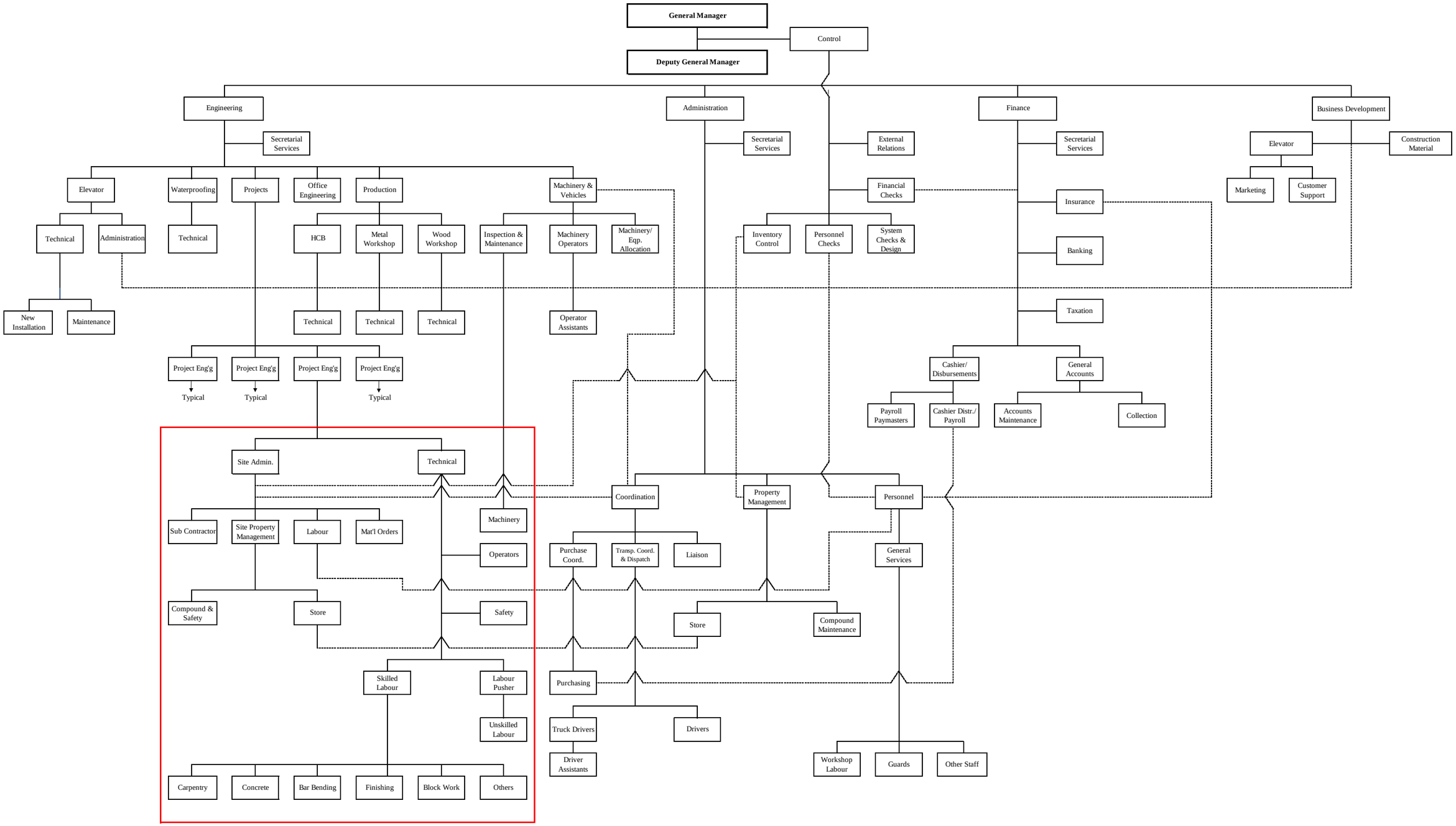

Notes

1 Area enclosed in the red box indicates the organization breakdown in a typical building construction project.

2 Dotted lines indicate cross links between boxes located in different wings of the OBS.